Alle Rechte vorbehalten/ *All rights reserved*

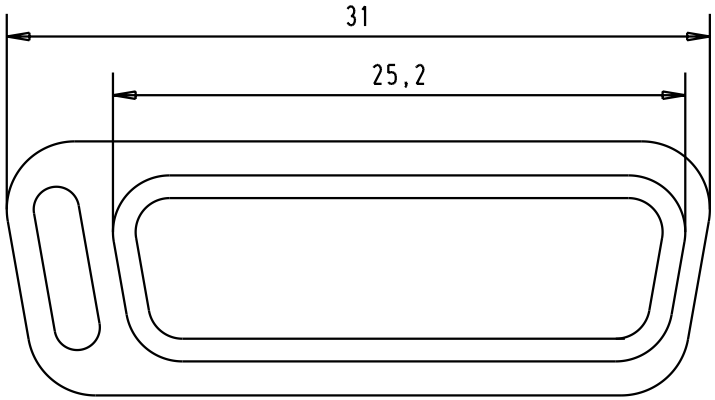

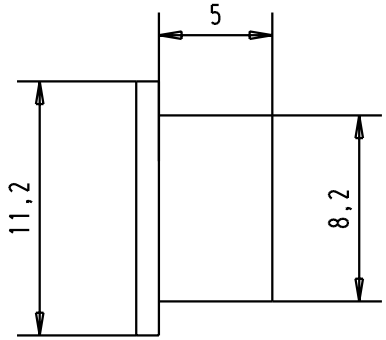

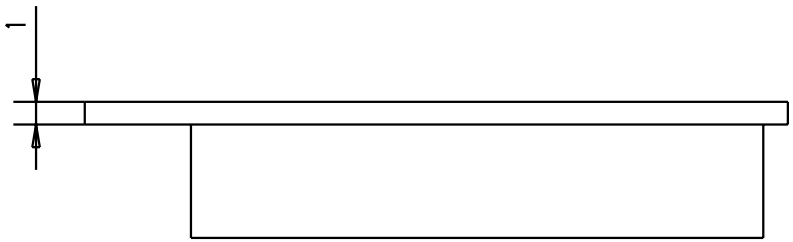

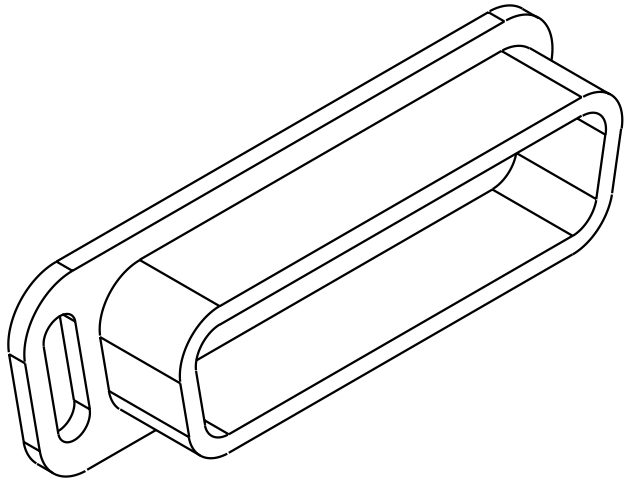

							Dat.	Name	All Dim. in mm Orig. Size DIN A 4	D-Sub, Dust cap, thermoplastic black, for male connector 15 poles	Maßstab/ *Scale*
						Detail.	09-APR-02	CV			3:1
						Insp.					
						Stand.					
09 67 015 0611									HARTING EURL F-95972 Paris	TB 09670150611	Blatt/ *Page*
			29768	09-APR-02	CV						1
Part number			Mod.	Dat.	Name					Sub.	